Yuan Dean Scientific CO.,LTD

80T/81T Series

RoHS Compliant

STANDARD LOW POWER INDUCTORS DESIGNED FOR GENERAL PURPOSE USE- SWITCH MODE

FEATURES

- HIGH INDUCTANCE STABILITY WITH VARYING VOLT-SECONDS AND LOAD CURRENTS.
- COMPACT,STANDARD PACKAGES.
- LOW PROFILE OR VERTICAL PACKAGES.
- RECOGNIZED BY UL 1950

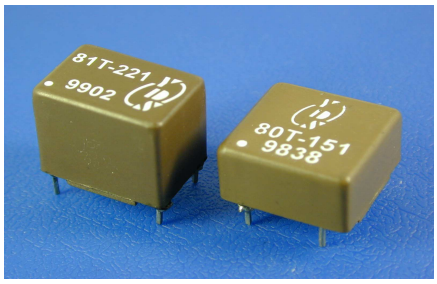

TEST CONDITIONS

- **Inductance ---------- 10KHz/1V**

ELECTRICAL SPECIFICATIONS @25℃-Operating temperature -30℃ TO +130℃

REFERENCE OPERATUNG VALUES						DESIGN CONTROL VALUES		
LOW PROFILE PART NUMBER	**VERTICAL PART** NUMBER	**INDUCTANCE** TYPICAL (μH)	**IDC (AMPS)**	**MAXIMUM ETOP (V-μSEC)**	**ENERGY STORAGE (μJ)**	**INDUCTANCE** NO DC (μH±20%)	**20KHz TEST mV NO DC**	**DCR (ΩMAX)**
80T-151	81T-151	150	1.7	80	215	145	110	0.42
80T-221	81T-221	220	1.5	90	240	226	140	0.42
80T-331	81T-331	330	1.0	100	165	316	170	0.78
80T-471	81T-471	470	0.90	120	190	480	210	1.26
80T-681	81T-681	680	0.85	175	245	690	250	1.50
80T-821	81T-821	820	0.75	175	230	780	270	2.40
80T-102	81T-102	1000	0.50	175	125	975	300	2.60

MARKINGS AND DIMENSIONS

Low Profile Package

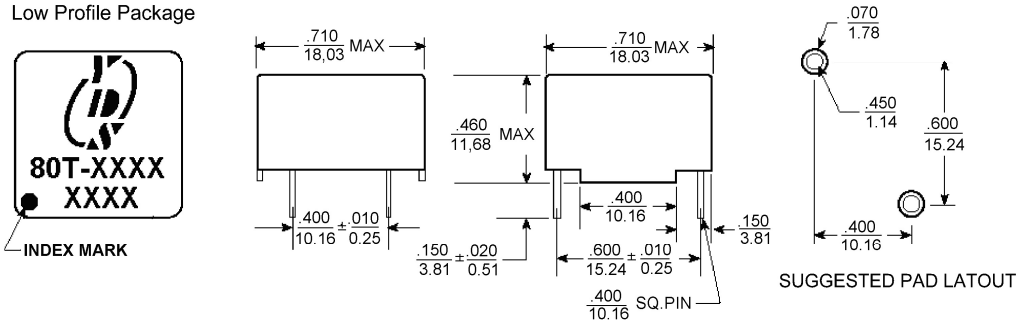

Vertical Package

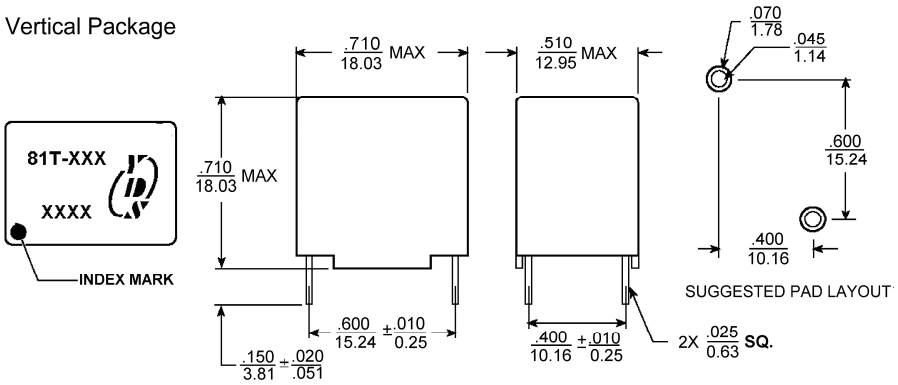

SCHEMATIC

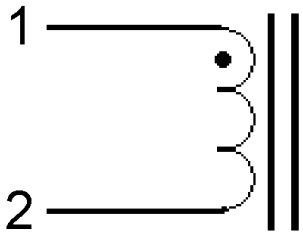

Part Number:

80T/81T - 151 NL

A B C

A:Series
B:Inductance
C:RoHS Version

Dimensions:inches/mm

Unless otherwise specified, all tolerances are ±.010/±0.25

http://www.yds.com.tw Tel: +886-6-3842899 E-mail:ydsweb@yds.com.tw
http://www.yuandean.com Fax: +886-6-3843288

DATE:2016/07/28